ERRATA for

PE Civil*: *Geotechnical Practice Exam

ISBN: 978-1-947801-30-1

Copyright 2023

Errata posted 12/01/2026

Revisions are shown in red.

Question 2:

This entire question has been replaced.

The SPT is a commonly used field test used to estimate several important soil parameters. Most published text books and manuals are based on the SPT data obtained using donut and safety hammers. Which of the following statements are true when using SPT data obtained with a calibrated automatic hammer?

Select the **two** that apply.

☐ A. No adjustment in calculating the SPT N-value is necessary.

☐ B. The energy ratio must be determined to calculate the energy-corrected SPT N-value adjusted to the 60% efficiency to use the published design charts.

☐ C. No adjustment is necessary if sufficient hydrostatic pressure in the borehole is maintained while drilling below the water table.

☐ D. The effects of overburden stress may need to be calculated when sampling non-indurated, coarse-grained soils (i.e., sandy soils) even when using a calibrated automatic hammer.

☐ E. The effects of overburden stress must be calculated when sampling fine-grained soils (i.e., clays and plastic silts) even when using a calibrated automatic hammer.

Question 4:

Borings are performed using hollow-stem augers with standard penetration tests (SPT). From previous experience near the site, the soils are expected to consist of a mostly medium-dense to dense sand. Which of the following conditions could result in considerably lower SPT blow counts than expected?

○ C. Soft to medium stiff clay layers are encountered over wet sand.

ERRATA for

PE Civil*: *Geotechnical Practice Exam

ISBN: 978-1-947801-30-1

Copyright 2023

Errata posted 12/01/2026

Question 8:

Engineering Parameter		In Situ Test Method
Bearing capacity		Borehole slug test
Shear wave velocity		Plate load test
Soil permeability		Pressuremeter test
Soil stratigraphy and estimate of soil type		Seismic cone penetrometer
Stress-strain modulus		Field torvane test
Undrained shear strength		Standard penetration test boring

Question 14:

A saturated cohesionless soil was tested to failure in a consolidated undrained triaxial apparatus with pore pressure measurement and the following data recorded:

Question 20:

This entire question has been replaced.

Which of the following approaches may be used if a silt fence is full to the top of the fence?

Select the **two** that apply.

- ☐ A. Hay bales may be used to reinforce and stabilize the fence.
- ☐ B. The frequency of inspections should be increased.
- ☐ C. A second silt fence may be built downstream of the first fence if space is available.
- ☐ D. Sediment may be removed from behind the silt fence, and the silt fence may be repaired as needed.
- ☐ E. The area above the silt fence should be paved to reduce runoff.

ERRATA for

PE Civil*: *Geotechnical Practice Exam

ISBN: 978-1-947801-30-1

Copyright 2023

Errata posted 12/01/2026

Question 26:

The liquefaction potential of a site is to be evaluated. For Layer 3, the design earthquake-induced average shear stress is 450 psf, and the maximum allowable cyclic stress ratio (CSR) is 0.29. Use the following equation for shear stress to cause liquefaction:

$$\sum' = \sigma_v' \times \text{CSR}$$

The average factor of safety against liquefaction in Layer 3 is most nearly:

Question 30:

Based on ASCE 7, Chapter 20, and the shear wave profile below, what is the most likely site class for seismic design?

Depth (ft)	Shear Wave Velocity (ft/sec)
10	500
20	800
30	600
50	900
70	1,800
90	3,000

Question 47:

For shallow, horizontally stratified, collapsible alluvial soils, which mitigation method to reduce future settlements would most likely create additional problems, in an area that is already extensively developed, with nearby existing slab-on-grade structures?

Question 51:

Which of the following methods are recommended for mitigating the effects of a rock fall?

☐ B. Improved stormwater management

ERRATA for

PE Civil*: *Geotechnical Practice Exam

ISBN: 978-1-947801-30-1

Copyright 2023

Errata posted 12/01/2026

Question 58:

For the mechanically stabilized earth wall (MSEW) shown, consider dead loads only, and assume Rankine earth pressures. To provide a factor of safety of 2.0 for sliding stability, the **minimum** length (ft) of the reinforcement within the MSEW must be most nearly:

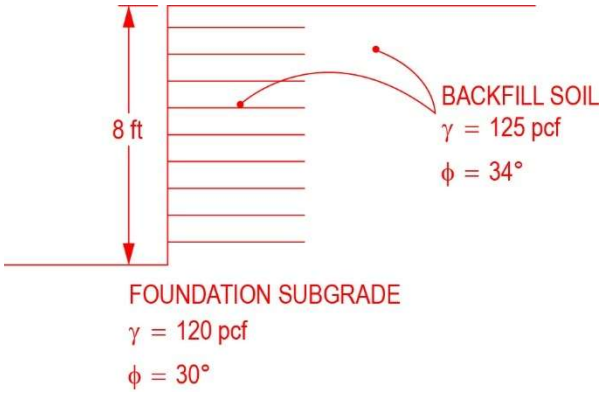

Question 59:

Using the bonding of the concrete to the sheeting and assuming a unit weight of concrete is 150 pcf, the **minimum** thickness (ft) of the tremie slab is _____.

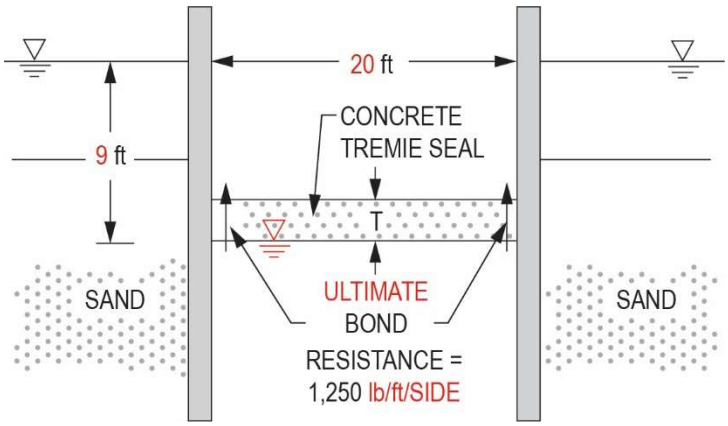

ERRATA for

PE Civil*: *Geotechnical Practice Exam

ISBN: 978-1-947801-30-1

Copyright 2023

Errata posted 12/01/2026

Question 64:

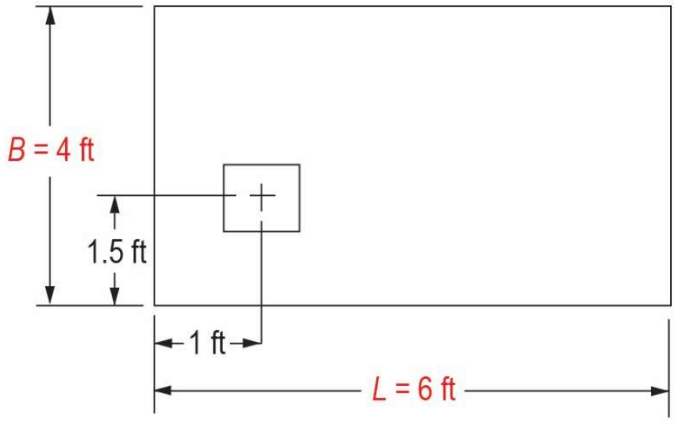

Question 70:

Ignore any side resistance within the soft clay but include the weight of the pile.

Question 75:

A 4×3 driven pile group installed in medium-dense sand will be used to support a bridge pier in an area with a high potential for storms that will result in significant lateral loads on the foundation.

Question 78:

☐ E. Pile inclination

Solution 2:

This entire solutions has been replaced.

Reference: FHWANHI-06-088

To use the standard design charts, the SPT N-value of the automatic hammer must be adjusted to the SPT N-value of the older hammers.

The automatic hammer must still be corrected for overburden to estimate the relative density and internal friction angle under the same circumstances that the overburden needs to be adjusted for the older hammers. However, the correction for overburden stress is not required for fine-grained soils.

THE CORRECT ANSWERS ARE: B, D

ERRATA for

PE Civil*: *Geotechnical Practice Exam

ISBN: 978-1-947801-30-1

Copyright 2023

Errata posted 12/01/2026

Solution 4:

Options A and D increase the pore water pressures and therefore would decrease the SPT values.

Option C, soft to medium stiff clays, would have a lower SPT value relative to medium dense to dense sands.

Solution 8:

Engineering Parameter	In Situ Test Method
Bearing capacity	Plate load test
Shear wave velocity	Seismic cone penetrometer
Soil permeability	Borehole slug test
Soil stratigraphy and estimate of soil type	Standard penetration test boring
Stress-strain modulus	Pressuremeter test
Undrained shear strength	Field torvane test

ERRATA for

PE Civil*: *Geotechnical Practice Exam

ISBN: 978-1-947801-30-1

Copyright 2023

Errata posted 12/01/2026

Solution 9:

Subsurface Condition or Purpose of Exploration	Exploration Method
Loose to medium-dense sand with a shallow groundwater table in a high-seismic environment	Mud rotary drilling **or** cone penetrometer testing
Soil layers with significant quantities of cobbles and boulders	Becker Hammer penetration test
Soft to stiff cohesive soils where samples are needed for consolidation and triaxial testing	Hollow-stem auger drilling **or** mud rotary drilling
Evaluation of near-surface stratigraphy and potential location of seismic faults	Test pit exploration
Evaluation of conditions beyond the tip of a proposed deep foundation element to be installed in Karst conditions with potential for dissolution cavities or voids and a water table below the exploration depth	Mud rotary drilling **or** air rotary drilling

Solution 20:

A second silt fence will, in effect, replace the first fence and protect the off-site area.

Removing and repairing the silt fence will restore the functionality of the silt fence.

THE CORRECT ANSWERS ARE: C, D

ERRATA for

PE Civil*: *Geotechnical Practice Exam

ISBN: 978-1-947801-30-1

Copyright 2023

Errata posted 12/01/2026

Solution 29:

Effective stress at mid-depth of 1-ft extension =

(125 pcf)(10 ft) + (130 pcf)(2 ft) + (130 pcf – 62.4 pcf)(18 ft + 0.5 ft) =2,760.6 psf

β = 0.91

Qs = β × effective stress

0.91 × 2,760.6 psf = 2.51 ksf

π × 6 ft = 18.85 ft

2.51 ksf × 18.85 ft × 1.0 ft = 47.3 kips

THE CORRECT ANSWER IS: 47.3

Solution 30:

v_1 = 500 ft/sec

$$v_{ave} = \frac{d_1 + d_2 + d_3 + d_4 + d_5 + d_6}{\frac{d_1}{v_1} + \frac{d_2}{v_2} + \frac{d_3}{v_3} + \frac{d_4}{v_4} + \frac{d_5}{v_5} + \frac{d_6}{v_6}} = 930 \text{ ft/sec}$$

ASCE 7 (Eq. 20.4-1) > 600 ft/sec and < 1,200 ft/sec
Site Class D

Solution 53:

$$P_a = \frac{1}{2}\gamma H^2 K_a = \frac{1}{2}(120)12^2(0.3) = 2,592 \text{ lb/ft}$$

$$\text{Moment arm } \frac{12}{3} + 1 = 5 \text{ ft}$$

$$M_{\max} = (2,592 \text{ lb/ft})(5 \text{ ft}) \times 10 \text{ ft} = 130,000 \text{ ft-lb}$$

ERRATA for

PE Civil: Geotechnical Practice Exam

ISBN: 978-1-947801-30-1

Copyright 2023

Errata posted 12/01/2026

Solution 58:

Driving force:

$k_a = \tan^2(45 - \phi/2)$

$\tan^2(45 - 34/2)$

0.28

$\mathbf{F}_1 = 1/2\ k_a\ \gamma\ H^2$

$1/2\ (0.28)\ (125\ \text{lb/ft}^3)(8\ \text{ft})^2$

$1{,}120\ \text{lb/ft}$

$\mathbf{F}_D = \mathbf{F}_1 = 1{,}120\ \text{lb/ft}$

Resisting forces:

$R = V \times \mu \times L$

$125\ \text{lb/ft}^3 \times 8\ \text{ft} \times L \times \tan 30°$

$577.4\ L\ \text{lb/ft}$

$$\text{FS} = \frac{\mathbf{F}_R}{\mathbf{F}_D} = \frac{577.4\ L}{1{,}120\ \text{lb/ft}} = 2.0$$

$$L = \frac{2(1{,}120)\ \text{lb/ft}}{577.4\ \text{lb/ft}} = 3.9\ \text{ft}$$

$\approx 4\ \text{ft}$

Solution 64:

$e_B = 2.0\ \text{ft} - 1.5\ \text{ft} = 0.5\ \text{ft}$

$e_L = 3.0\ \text{ft} - 1.0\ \text{ft} = 2.0\ \text{ft}$

$B_f' = B_f - 2e_B = 4.0\ \text{ft} - 2 \times 0.5\ \text{ft} = 3.0\ \text{ft}$

$L_f' = L_f - 2e_L = 6.0\ \text{ft} - 2 \times 2.0\ \text{ft} = 2.0\ \text{ft}$

$A' = B_f' \times L_f' = 3.0\ \text{ft} \times 2.0\ \text{ft} = 6.0\ \text{ft}^2$

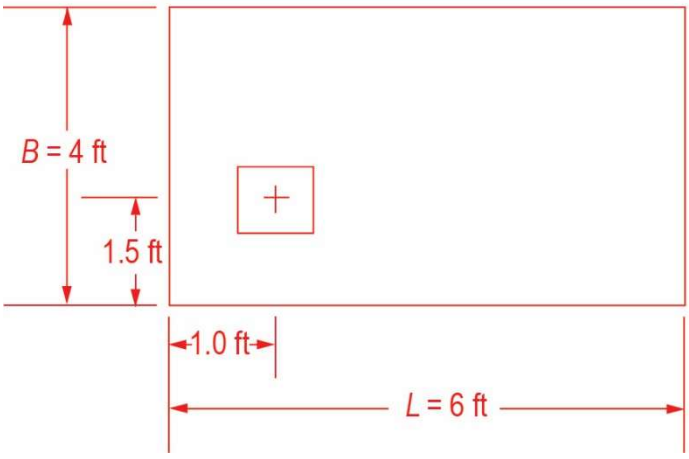

ERRATA for

PE Civil*: *Geotechnical Practice Exam

ISBN: 978-1-947801-30-1

Copyright 2023

Errata posted 12/01/2026

Solution 67:

For a uniform applied foundation pressure:

$$\text{Required foundation area, } A = \frac{150 \text{ kips} + 275 \text{ kips}}{3.0 \text{ kips/ft}^2} = 141.7 \text{ ft}^2$$

Find the location of column load resultant (by setting moments about Q_1 equal to 0):

$$\frac{275 \text{ kips} \times 15 \text{ ft}}{150 \text{ kips} + 275 \text{ kips}} = 9.7 \text{ ft right of } Q_1$$

For uniform distribution of soil pressure, the loads must pass through the foundation centroid.

Find the length L such that the resultant load is at the center as follows:

Solution 68:

Since at ground surface, $D/B = 0$.

Enter curve at 20°, intercept $D/B = 0$ curve $\therefore N_{cq} = 3$

$q_{ult} = cN_c + 1/2\ \gamma BN\gamma + \gamma D_f N_q$

$N_c = N_{cq}$

$N\gamma = 0$ for $\phi = 0$

$D_f = 0$

$\therefore q_{ult} = cN_{cq}$

$q_{ult} = (2.2)\ (3) = 6.6$ ksf

Must use FS = 3.0

$$q_{all} = \frac{q_{ult}}{FS} = \frac{6.6}{3.0} = 2.2 \text{ ksf}$$

Solution 74:

A 200 ft-kip moment will compress piles 3, 6, 9 most.

A 100 ft-kip moment will compress piles 7, 8, 9 most.

ERRATA for

PE Civil: Geotechnical Practice Exam

ISBN: 978-1-947801-30-1

Copyright 2023

Errata posted 12/01/2026

Solution 75:

Reference: FHWA-NHI-16-009, GEC 012, Vol.1 (2016), Table 7-23, p. 367

Use two rows for medium dense sand, and interpolate row p-multipliers for 4b:

Spacing	Row 1	Row 2	Row 3+
3b	0.8	0.4	0.3
4b	0.9	0.6	0.5
5b	1.0	0.85	0.7